Appliance Data Sheet

Product Type	Electric Oven
Product Code	**UBO734MB**
	**Product Description** 60cm Multifunction 71L Airfry Pyro Oven 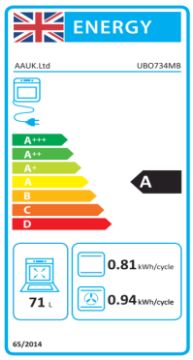 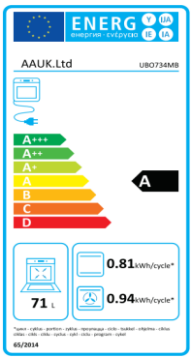

Features / Specification	
Barcode	8422248619325
Colour	Matt Black Glass (Tinted)
Net Oven Cavity	71L
Cooking Type	True Fan + Airfry
Control Type	Pop-Out Rotary Knobs
Timer	LED Touch Programmer
Display Colour	Red
Functions	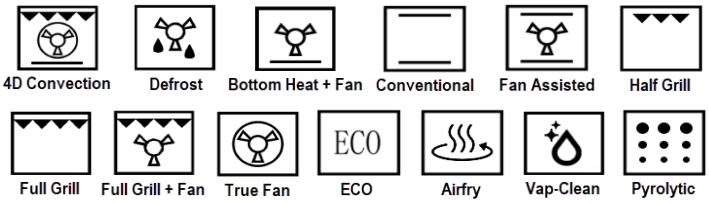
Oven Light	Yes
Self Cleaning	Pyrolytic & Vap-Clean (Basic Hydrolytic)
Oven Shelves	2
Airfry Tray	1
Oven Tray	1 Deep & 1 Shallow
Grill Trivet	1
Telescopic Runners	1 Set

Dimensions & Technical Information

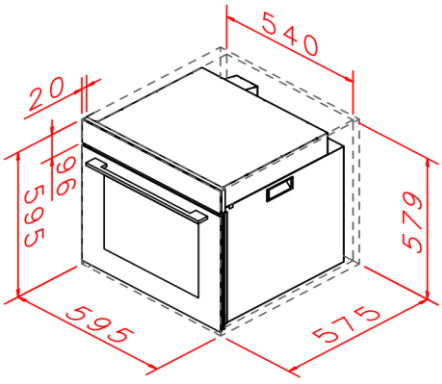

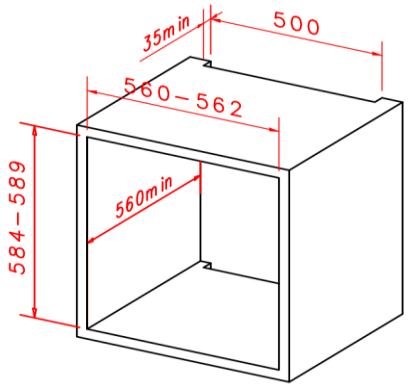

Product Dimensions (W x H x D)	595 x 595 x 575mm
Packed Dimensions (W x H x D)	625 x 665 x 655mm
Product Weight	43kg Packed / 39kg Unpacked
Power Supply	220-240V ~ 50Hz
Max Power	2800W
Cable / Plug	1.2m / UK
Supply Connection	13A